FIRST ANGLE PROJECTION

(ALL DIMENSIONS ARE IN mm)

DRG. NO 2430358100 1

THE INFORMATION ON THIS DOCUMENT IS THE PROPERTY OF BHARAT HEAVY ELECTRICALS LIMITED.
IT MUST NOT BE USED DIRECTLY OR INDIRECTLY IN ANY WAY DETRIMENTAL TO THE INTEREST OF THE COMPANY.

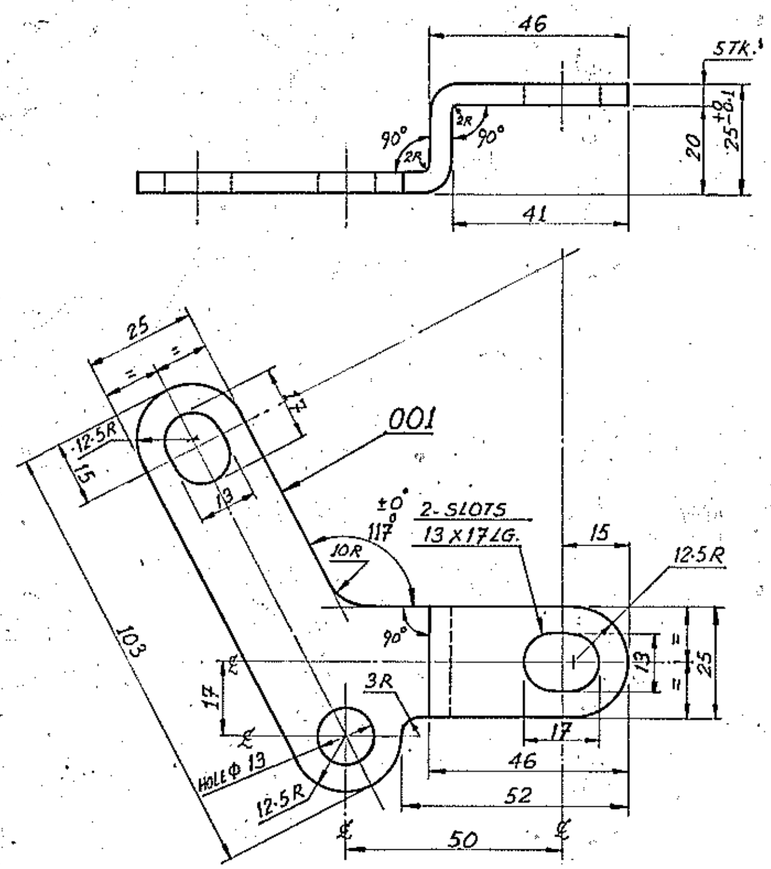

'R' – TERMINAL

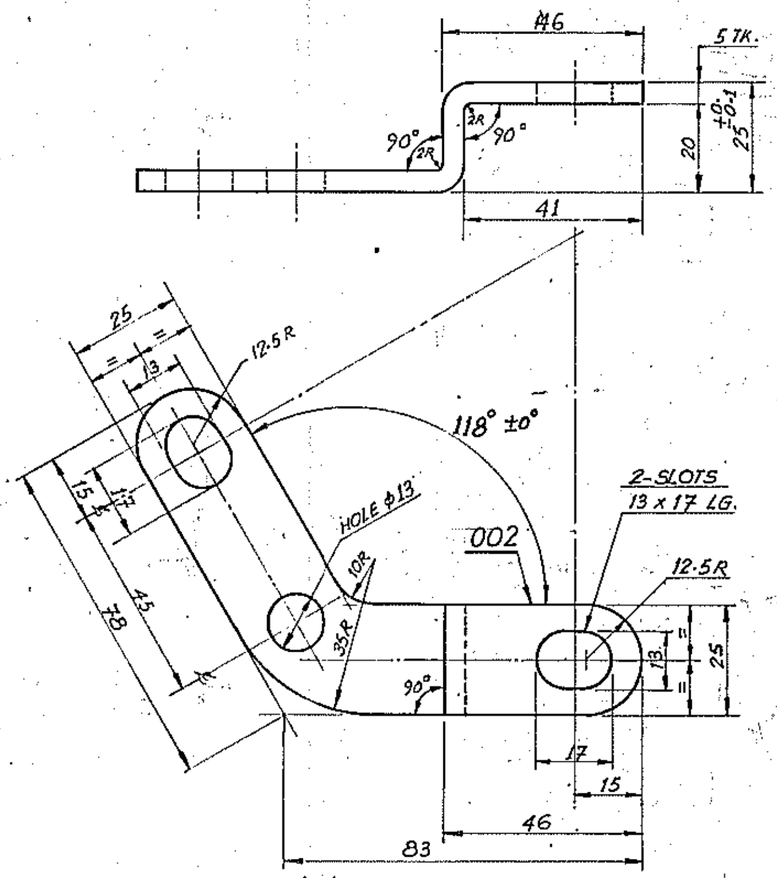

'B' – TERMINAL

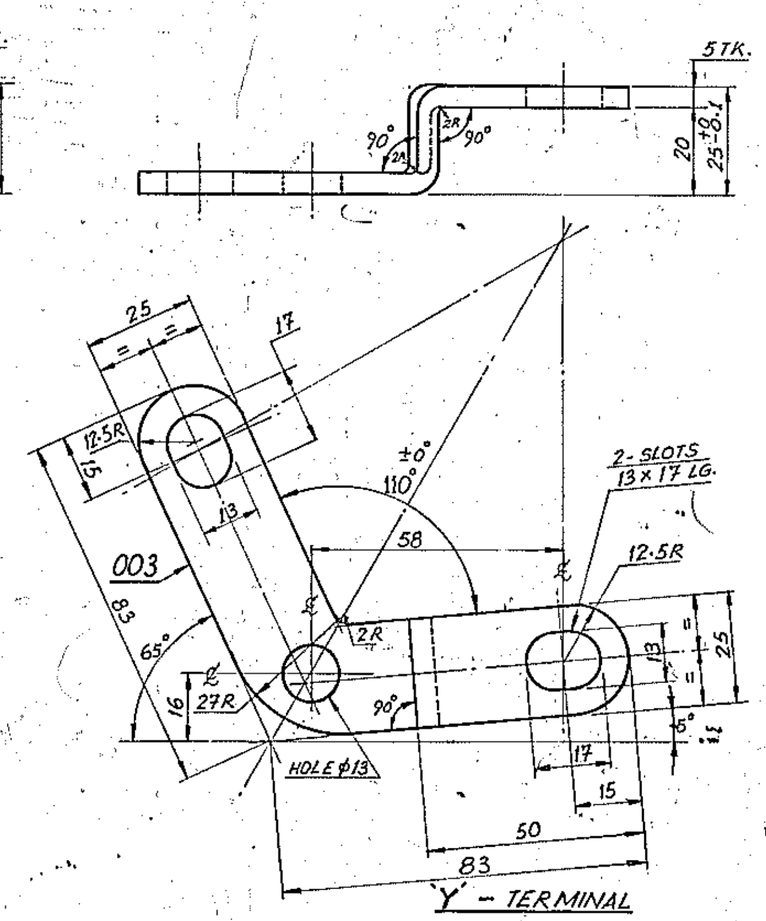

'Y' – TERMINAL

NOTE :-
1. ALL CONNECTORS ITEM 001, 002 & 003 MUST BE SQUARE & TRUE IN ALL RESPECT.
2. MAINTAIN ALL DIMENSIONS WITHIN ± 0.2 UNLESS OTHERWISE STATED.
3. REMOVE BURRS & SHARP EDGES.

FINISH :- CONNECTORS ITEM 001, 002 & 003 TO BE BRIGHT ELECTROTINNED TO 8 MICRONS TKNS. TO PR. SPECN. AA0673611.

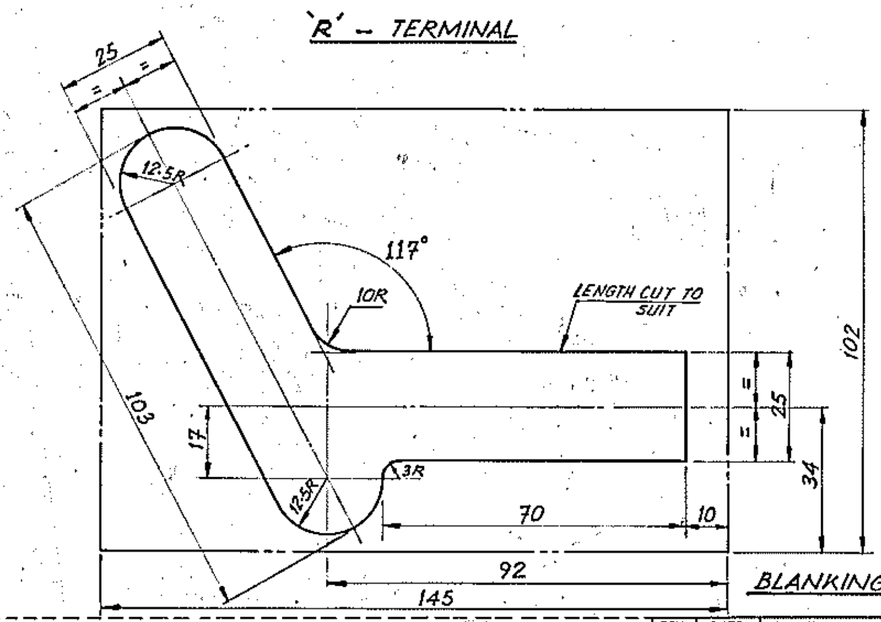

BLANKING OF 'R' – TERMINAL

VAR. 01	VAR. 00	REMARKS	ITEM NO.	DESCRIPTION	DRG. NO.	ITEM / VAR.	MATL. CODE / MATL. SPECN.	UNIT WT. / QTY.
			003	'Y' COPPER CONNECTOR 5TK x 25 x 160 LG. HARD CPR. STRIP			AA1201903025 / AA12003	
		LENGTH CUT TO SUIT	002	'B' COPPER CONNECTOR 5TK x 25 x 150 LG. HARD CPR. STRIP			AA1201903025 / AA12003	
			001	'R' COPPER CONNECTOR 5TK. x 102 x 145 LG. HARD CPR. PLATE			AA12003	

ADDITIONAL INFORMATION
NEW DESIGN OF DIODE WHEEL WITH 8MM TK. ALUMINIUM PLATES WITH RADIALLY MOUNTED DIODES.
STATUS OF DRG.

DISTRIBUTION OF PRINTS

O' COPY	1
TAM	4
TNX	1

REV.	DATE	ALTERED / CHECKED / APPROVED	REV.	DATE	ALTERED / CHECKED / APPROVED	REV.	DATE	ALTERED / CHECKED / APPROVED
ZONE			ZONE			ZONE		

ग्राहक/परियोजना का नाम / उत्पाद का प्रकार या / TYPE OF PRODUCT OR NAME OF CUSTOMER / PROJECT: DIODE WHEEL FOR 14.0 MM SHAFT DIA. ALTERNATOR TYPE - TA7003 BX

बीएचईएल भारत हेवी इलेक्ट्रिकल्स लिमिटेड भोपाल
BHARAT HEAVY ELECTRICALS LTD. BHOPAL

	नाम / NAME	हस्ता. / SIGN.	दि. / DATE	बोर. की संख्या NO. OF VAR.
बनाया DRN.	R.K. Sharma	RKS	30.12.00	
जांचा CKD	M. Verma		30.12.00	
स्वीकृत APPD.	M. Verma		30.12.00	

विभाग DEPT.	अन. टाल. नाप की श्रेणी UNTOL. DIMS. GR.	अनुपात SCALE	भार (कि.ग्रा.) WEIGHT (K.G.)	अरो. ड्राईंग का संदर्भ REF. TO ASSY. DRG.	मद. क. ITEM NO.	मद/संख्या NO. OF ITEM
TME	M	1:1	–	04303581001	034 & 035	–
कोड CODE 405						

शीर्षक / TITLE: COPPER CONNECTORS FOR DIODE & R,Y,B CONNECTIONS FOR 450A 25 V D.C. DIODE WHEEL ASSY.

ड्राईंग क्र. / DRAWING NO. 2430358100 1 — पुन. REV. 00

पृष्ठ क्र. / SHT. NO. 1 — पृष्ठों की सं. / NO. OF SHT. 1

A2 SIZE

P.O. No. 3756062